Balancing Awareness Fast Charging Control for Lithium-Ion Battery Pack Using Deep Reinforcement Learning

Yikun Yang, Jiarui He, Chunlin Chen, *Senior Member, IEEE*, and Jingwen Wei, *Member, IEEE*

***Abstract*—Minimizing charging time without damaging the batteries is significantly crucial for the large-scale penetration of electric vehicles. However, charging inconsistency caused by inevitable manufacture and usage inconsistencies can lead to lower efficiency, capacity, and shorter durability due to the "cask effect." This goal can be achieved by solving a series of constrained optimization problems with the model-based framework. Nevertheless, the high computational complexity, identifiability, and observability issues still limit their fidelity and robustness. To overcome these limitations and provide end-to-end learning strategies, this article proposes a balancing-aware fast-charging control framework based on deep reinforcement learning. In particular, a cell-to-pack equalization topology is first introduced to dispatch energy among in-pack cells. Then, the balancing awareness fast charging problem is formulated as a multiobjective optimization problem by considering charging time, consistency, and over-voltage safety constraints. Further, a deep reinforcement learning framework using a deep Q-network is established to find the optimal policy. By using the generalization of a neural network, the learned policies can be transferred to real-time charging and balancing control, thus improving the applicability of the proposed strategy. Finally, numerous comparative simulations and experimental results illustrate its effectiveness and superiority in terms of charging rapidity and balancing.**

***Index Terms*—Cell balancing, fast charging, lithium-ion battery pack, reinforcement learning.**

I. Introduction

RECHARGEABLE lithium-ion batteries (LIBs) have been recognized as one of the most promising energy storage choices in electric vehicles (EVs) and microgrids due to their desirable metrics, such as high power density, high energy density, low self-discharge rate, and long lifetime [1], [2]. With the rapid growth of EVs, the facilities of battery management systems (BMSs) appear a more sophisticated and complex trend. Battery fast charging control that minimizes the charging time without damaging the cell plays a significantly crucial role in the large-scale penetration of electric vehicles [3]. This goal can be achieved by using excessive current, which, however, risks the violations of critical physical safety limitations and premature aging [4]. On the other hand, practical battery energy storage systems consist of hundreds and even thousands of individual cells to meet the high-voltage and capacity requirements. The cell variations caused by inevitable inconsistencies during manufacturing and usage processes will significantly influence the charging efficiency, capacity, and lifetime of the battery pack [5]. The high charging currents during fast charging will further magnify the inconsistency effects. Thus, it is critical to developing a balancing awareness of fast charging control strategies to shorten the charging time of battery packs and achieve equalization of in-pack cells.

To achieve optimal charging management and tackle the issues of cell inconsistency among individual in-pack cells, a plethora of techniques have been reported, which can be reviewed from the following three aspects.

1) Model-Free Charging Control Strategies: Model-free methods employ predefined charging protocols. The most commonly used model-free methods is the constant current and the constant voltage (CC&CV). An improvement is the CC&CV charging protocol which first uses a CC to charge the battery until its terminal voltage reaches the upper cutoff voltage and then switches to CV until the current drops below a preset threshold [6], [7]. Another commonly used method is the multistage constant current charging strategy (MCC) [8]. These model-free methods can be easily controlled and, therefore, have been widely adopted in practical applications but may cause damage to batteries. Because the performance of these methods are determined by several important thresholds, the thresholds may be aggressive at certain work point [9]. However, the charging current and voltage profiles are determined by predefined limits, which lack an insight understanding of the physical and electrochemical characteristics. And the charge rate and voltage limits are chosen according to the empirical knowledge of battery behaviors and the solutions are, thus, often conservative. Furthermore, the balancing algorithm and

Manuscript received 20 October 2022; revised 17 January 2023, 17 March 2023, and 20 April 2023; accepted 20 April 2023. Date of publication 15 May 2023; date of current version 27 October 2023. This work was supported in part by the National Natural Science Fund of China under Grant 62203209, in part by the Fundamental Research Funds for the Central Universities under Grant 0221-14380010, and in part by the Natural Science Foundation of Jiangsu Province under Grant BK20200333. *(Corresponding author: Jingwen Wei.)*

The authors are with the School of Management and Engineering, Nanjing University, Nanjing 210093, China (e-mail: ykyang@smail.nju.edu.cn; jrh@smail.nju.edu.cn; clchen@nju.edu.cn; jwwei@nju.edu.cn).

Color versions of one or more figures in this article are available at https://doi.org/10.1109/TIE.2023.3274853.

Digital Object Identifier 10.1109/TIE.2023.3274853

0278-0046 © 2023 IEEE. Personal use is permitted, but republication/redistribution requires IEEE permission.
See https://www.ieee.org/publications/rights/index.html for more information.

Authorized licensed use limited to: Nanjing University. Downloaded on December 03,2025 at 12:24:48 UTC from IEEE Xplore. Restrictions apply.

charging strategies are designed separately, which may lead to suboptimal charging and balancing solutions, and even cause safety issues.

2) Model-Based Charging Control Strategies: Model-based strategies first employ various battery models to capture battery dynamics and estimate charging states. Then, the specific optimization objective functions and constraints are formulated with the consideration of different metrics, such as charging speed, degradation, and thermal [10]. Finally, optimization algorithms are designed to find optimal solutions to guide battery charging behaviors. According to the type of battery models, these approaches can be roughly categorized into two classes, i.e., reduced-order electrochemical models (RoEM) based and equivalent-circuit-model (ECM) based.

RoEM-based algorithms are widely employed to seek the optimal charging strategies due to their ability to capture or estimate the internal states of LIBs, such as Legendre–Gauss–Radau (LGR) pseudospectral method in [11], model predictive control (MPC)-based strategy in [9], and PI controller in [10]. Although in-depth insights into battery charging electrochemical mechanisms can be captured and considerable efforts have been devoted to developing low-order models, these RoEM-based charging approaches are still far away from the real-time BMS due to high complexities and difficulties in parameter identifications and state estimations. Comparatively, ECMs are extensively used in industrial BMSs as they are relatively simple and easy to parameterize.

For the ECM-based charging strategies, nonlinear optimization charging problems can be formulated through describing the battery dynamic behaviors by employing convenient circuit components, such as the combination of electro-thermal-aging battery ECM and LGR pseudospectral method in [12], MPC in [13], and particle swarm optimization algorithm in [14]. Although these methods are the main candidates in real-time BMS applications, all of these works are developed for an individual cell. It is worth noting that inappropriate charging strategies may increase cells' inconsistencies, which, however, are not considered in these works. Thus, a suitable charging strategy that takes cell balancing into account is necessary.

3) Charging Equalization Strategies: The charging equalization strategies employ external circuit designs to deploy energy among individual cells [15]. The performance of the equalization systems depends on the battery systems, equalization circuit topology, and equalization algorithms. For instance, Wang et al. [16] proposed a mean difference average method based on bidirectional flyback dc/dc converters. Zheng et al. [17] presented inductor-based equalizers, and control strategies in CC, CV charging, and discharging processes were also presented. Ouyang et al. [18] proposed a hierarchical cell equalizing control approach based on a module-based cell-to-cell balancing system. Dong et al. [5] formulated the battery equalization problem as a path-searching problem, and solved it by the A-star algorithm. Although these balancing strategies can achieve equalization status, the battery pack's fast charging and the equalization systems are controlled separately. How to adjust the charging profile according to inconsistencies statutes and how to control the equalization system according to charging profiles are not fully considered. Despite these charging equalization strategies using external equalization circuits, the multimodule charger was designed to charge every individual cell independently [19]. However, the complexity of this multimodule charger increases with the increasing number of the series-connected cells, and thus, their applications in large-scale systems are limited by high cost and computational complexity for searching optimal charging profiles.

For the model-based optimal charging control considering cell inconsistencies, there are still two challenges that need to be overcome.

First, most existing studies design charging and balancing control strategies separately. The coupling relationship between them is roughly neglected. However, fast charging and equalization algorithms should be developed simultaneously, especially for scenarios with high charging currents. A high charging current will increase inconsistencies among in-pack cells and press on toward the safety constraints of the batteries [20], [21]. Next, although the model-based charging control frameworks can overcome the model mismatch through online state estimation and obtain a good control result, online model-based optimization algorithms still suffer from high computational complexity with the increase of in-pack cells and are challenging in practical applications.

To overcome the above drawbacks and limitations, this article proposes a balancing awareness fast charging control framework for lithium-ion battery packs using deep reinforcement learning (DRL) due to its characteristics of model-free and online adaptability. In detail, a cell-to-pack equalization topology is selected as the equalizer to dispatch unbalanced energy among in-pack cells. Then, a multiobjective optimization problem is formulated by fully considering the charging time and consistencies of the series-connected battery pack. Further, a model-free deep Q-network (DQN) algorithm is proposed to find the optimal fast charging and balancing strategies. Due to its model-free and high flexibility, only battery SOCs and terminal voltages are required. Next, an ECM-based simulation model is established to train the DQN, and the optimal policies are validated through extensive simulations. Finally, the learned policies are transferred experimentally using a practical battery pack. Both the simulations and experimental results illustrated the effectiveness and superiority of the proposed method. The main contributions of this work are summarized as follows.

1) Distinguished from the existing model-based studies that consider charging and balancing control strategies separately, the fast charging and balancing control problem is formulated as a multiobjective optimization problem with the consideration of charging time, inconsistency equalization, and overvoltage protection.
2) To obtain an adaptive solution to the formulated multiobjective optimization problem, a balancing awareness fast charging control framework is established using a DRL-based algorithm. A universal algorithmic framework using DQN is proposed to guarantee adaptability and practicability by establishing a generalized Q-network. To the best of our knowledge, it is the first time to solve a battery balancing problem using DRL.

Authorized licensed use limited to: Nanjing University. Downloaded on December 03,2025 at 12:24:48 UTC from IEEE Xplore. Restrictions apply.

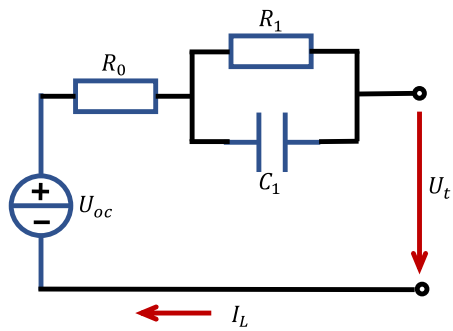

Fig. 1. (a) First-order Thevenin equivalent circuit model.

3) Different from most existing DRL algorithms that just use simulations for performance validation, real-world experimental results on $LiFePO_4$ battery pack are performed to evaluate the learned optimal policies in terms of charging time and inconsistencies, which makes the proposed algorithm more faithful.

II. Modeling, Parameterization, and Equalizers

If the DRL-based algorithm is directly trained using experimental data, it would cause significant costs in experimental time and waste of cells. Within this context, the use of an accurate and trustful battery model is fundamental, because it allows us to train the DRL algorithm in simulation, and then transfer the learned optimal policies to real-world applications. Thus, an ECM-based battery modeling and parameterization approach is first given out. Then, a cell-to-pack equalization topology is introduced. Finally, an integrated model of the battery pack is summarized.

A. Modeling for Individual Cell

The first-order Thevenin ECM is introduced to describe battery dynamic behaviors due to its simplicity and good adaptability. As shown in Fig. 1, this ECM consists of three basic elements, i.e., a nonlinear voltage source bridging battery SOC and open-circuit voltage U_{oc}, an ohmic resistance R_0 simulating sudden voltage drop/rise for step current input, and an R $\parallel$ C network describing polarization effects. The dynamics of this ECM can be expressed as follows [22]:

$$U_1(k+1) = \alpha_1 U_1(k) + (1-\alpha_1) R_1 I_L(k) \tag{1}$$

$$U_t(k) = U_{oc}(k) - U_1(k) - I_L(k) R_0 \tag{2}$$

where U_1 is the voltage across the R $\parallel$ C network. $\alpha_1 = \exp(-\Delta t/(R_1 C_1))$, Δt is sampling time, I_L is the load current (positive for discharging, negative for charging), and U_t is the terminal voltage. U_{oc} is a function of battery SOC, which can be calculated by

$$\mathrm{SOC}(k+1) = \mathrm{SOC}(k) - \frac{\eta_0 \Delta t}{3600 C_{\mathrm{bat}}} I_L \tag{3}$$

where $\eta_0 \in (0,1)$ is the coulombic efficiency, which is the ratio of the discharged capacity to the capacity needed to be charged to the initial state before discharge, and C_{bat} is the capacity in Ah.

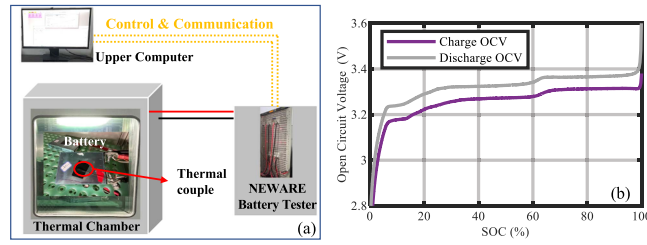

Fig. 2. (a) Battery test bench. (b) Measured open-circuit voltage.

TABLE I
Identified Battery Parameters

T(°C)	Number	Capacity(Ah)	$R_0(m\Omega)$	$R_1(m\Omega)$	$C_1(F)$	RMSE (mV) FUDS	RMSE (mV) UDDS
15	1	28.5488	3.1	1.4	1.0144×10^4	12.6	7.6
	2	24.5806	3.6	3.6	1.4312×10^4	12.7	13.6
	3	29.1602	2.6	1.5	1.1407×10^4	13.4	7.4
	4	28.6900	2.6	1.6	1.2583×10^4	13.5	4.3
25	1	29.0132	2.6	1.4	1.0869×10^4	13.8	6.7
	2	24.5237	2.4	2.2	1.4462×10^4	13.9	13.4
	3	29.3606	2.2	1.6	1.1888×10^4	13.1	7.5
	4	28.9650	2.1	1.6	1.1014×10^4	13.9	6.5
45	1	29.2965	1.4	0.9	1.7129×10^4	13.9	5.4
	2	25.0861	2.4	2.2	1.4165×10^4	12.5	12.8
	3	29.4405	0.7	0.8	5.1001×10^3	13.0	8.4
	4	29.2921	0.7	1.5	1.0796×10^4	11.7	6.9

From (1) to (3), it can be seen that the unknown parameters include $U_{oc}, R_0, \alpha_1, R_1, C_{\mathrm{bat}}$. To establish an accurate and trustful battery model, four $LiFePO_4$/Graphite cells are employed to identify these unknown parameters. The nominal capacity and voltage range of cells are 30Ah and 2.0∼3.65 V. The battery test bench is illustrated in Fig. 2(a), which consists of a NEWARE BTS4000 battery test system for battery charging/discharging control, a NEWARE MGDW-225–40 thermal chamber for ambient temperature control, and a host computer for programming and processing experimental data.

Considering the effect of temperature on the cells, the ambient temperatures are set to 15 °C, 25 °C, and 45 °C in experiments, respectively. A 1.2-A, i.e., C/25, low-current OCV test profile is performed as shown in Fig. 2(b) to obtain the OCV-SOC relationship. The results in [23] can illustrate that cells share a common OCV-SOC relationship under different temperature conditions. The capacity test according to GBT 31486–2015 Standard is performed to obtain the current capacity and the coulombic efficiency of cells. The Dynamic Stress Test (DST) with particle swarm optimization is employed to identify the parameters of the cells. The test data under the Federal Urban Driving Schedule (FUDS) and the Urban Dynamometer Driving Schedule (UDDS) are employed to validate the identified parameters. In the case of 25 °C, the comparison between the measured voltage and predicted voltage is illustrated in Fig. 3. The numeric results are listed in Table I. It is worth noting that with the rise of temperature, the capacity of the cells has an upward trend, and the resistances of the cells have a downward trend. And the coulombic efficiency of the $LiFePO_4$/Graphite cell is 99.7%. It can be seen from Fig. 3 and Table I that the predicted voltages follow the measured voltage with high accuracy. The root square mean errors (RMSEs) are less than 14 mV,

Authorized licensed use limited to: Nanjing University. Downloaded on December 03,2025 at 12:24:48 UTC from IEEE Xplore. Restrictions apply.

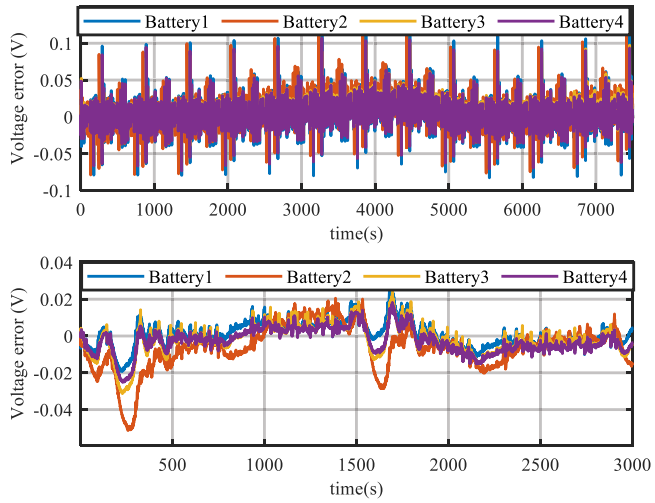

Fig. 3. Validation of battery model at 25 °C under FUDS (upper) and UDDS (lower) conditions.

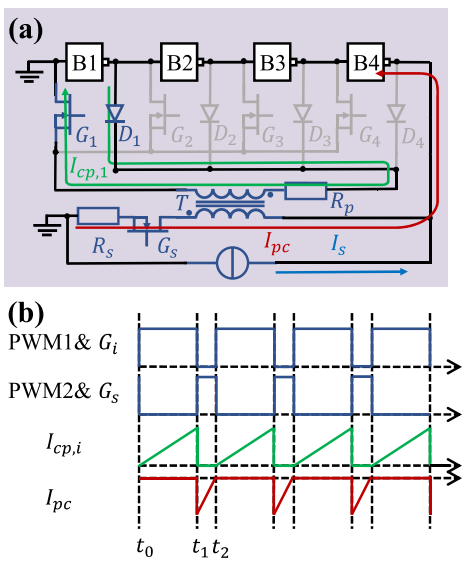

Fig. 4. Cell-to-pack equalization module with charger.

which indicates the accuracy and effectiveness of the established battery model. It can also be seen that capacity inconsistency can be observed among these four cells, motivating the effective balancing control in practical applications.

B. Modeling for the Cell-to-Pack Equalizers

To dispatch the energy among unbalanced cells, a cell-to-pack equalization topology is selected as the balancing circuit, which is widely used in EVs. This topology has the advantages of simple structure and high equalization efficiency. As shown in Fig. 4(a), the equalizer consists of a time-sharing bidirectional isolated flyback transformer T, a primary switch G_i connected to the battery end, and a secondary switch G_s connected to the pack end. R_p and R_s are primary and secondary protection resistors, respectively. Diode D_i is employed to protect the whole equalization circuit. The balancing switches G_i and G_s are controlled by PWM1 and PWM2, respectively. It is worth noting that only one cell could be chosen to perform balancing control, to protect the battery pack from being overcharged. In addition, I_s is the bus current, representing the controllable fast-charging current.

As shown in Fig. 4(b), the equalization process follows two stages. First, G_i is turned ON from t_0 to t_1 through PWM1, the energy will be transferred from B_i to T. The current is $I_{cp,i}$. Then, G_s is turned ON through PWM2, the energy will be transferred from T to the whole pack from t_1 to t_2. The current is I_{pc}. The peak value of $I_{cp,i}$ and I_{pc} are the same, while the duty cycle of PWM1 is n times of PWM2 to reach the charge balance. n is the number of battery cells in the pack. Thus, the relationship between $I_{cp,i}$ and I_{pc} can be represented by

$$\alpha U_{t,i}(k) I_{cp,i}(k) = \left(\sum_{i=1}^{n} U_{t,i}(k)\right) I_{pc}(k) \tag{4}$$

where α is the energy transfer efficiency of T; $U_{t,i}$ is the terminal voltage of the ith cell; $I_{cp,i}/I_{pc}$ is the equalization currents at the cell/pack side of the equalizer, respectively. The same simplification as in [15] is adopted. Since the internal resistance of the battery is small, the terminal voltage of the battery can be assumed to be the same to simplify the problem, similar to [15] and [18]. Equation (4) can, thus, be approximated as

$$I_{pc}(k) = \frac{\alpha}{n} I_{cp,i}(k). \tag{5}$$

In the simulation, the frequency of the PWM applied on the MOSFETs is 124 kHz, and the duty cycles applied on G_i and G_s are set as 80% and 19%, respectively. The I_{pc} is set as 7.5 A.

C. Pack Modeling Considering Balancing Current

According to Kirchhoff's current law, the total battery current I_L includes the equalization currents I_{pc}, I_{cp} and the external charging current I_s, which can be expressed as

$$I_L = I_s + I_{pc} - I_{cp}. \tag{6}$$

Combining (1), (2), and (6), the model for a battery pack including n individual cells can be expressed as

$$\mathbf{x}(k+1) = \mathbf{A}\mathbf{x}(k) + \mathbf{B}(\mathbf{1}_{2n} u_1(k) + C\left[\mathbf{u_2}(k); \mathbf{u_2}(k)\right]) \tag{7}$$

$$\mathbf{y}(k) = U_{oc}(\mathbf{x_1}(k)) - \mathbf{x_2}(k) - \mathbf{D}(\mathbf{1}_n u_1(k) + C\mathbf{u_2}(k)) \tag{8}$$

where $\mathbf{1}_n$ denotes a $n \times 1$ column vector of ones. $\mathbf{x_1}(k) = [SOC_1(k), \ldots, SOC_n(k)]^{\mathrm{T}} \in \mathbb{R}^{n\times 1}$, $\mathbf{x_2}(k) = [U_{1,i}(k), \ldots, U_{1,n}(k)]^{\mathrm{T}} \in \mathbb{R}^{n\times 1}$, $\mathbf{x}(k) = [\mathbf{x_1}(k), \mathbf{x_2}(k)] \in \mathbb{R}^{2n\times 1}$. $u_1 \triangleq I_s$ denotes the bus current. $\mathbf{y}(k) = [U_{t,i}(k), \ldots, U_{t,n}(k)]^{\mathrm{T}} \in \mathbb{R}^n$ is the terminal voltage vector. $\mathbf{u_2} = [u_{2,1}(k), \ldots, u_{2,n}(k)]^{\mathrm{T}} \in \mathbb{R}^{n\times 1}$ with Boolean elements $u_{2,i} \in \{0, 1\}, i = 1, 2, \ldots, n$, representing the status of balancing switches, and

$$\mathbf{A} = \left(\begin{array}{c|c} \mathbf{I}_n & \mathbf{0}_n \\ \hline \mathbf{0}_n & \boldsymbol{\alpha} \end{array}\right), \mathbf{B} = \left(\begin{array}{c|c} \mathbf{B}_1 & \mathbf{0}_n \\ \hline \mathbf{0}_n & \mathbf{B}_2 \end{array}\right),$$

$$C = \frac{1-\beta}{n} I_{cp}, \mathbf{D} = \mathrm{diag}(R_{0,1}, R_{0,2}, \ldots, R_{0,n})$$

Authorized licensed use limited to: Nanjing University. Downloaded on December 03,2025 at 12:24:48 UTC from IEEE Xplore. Restrictions apply.

where $\mathbf{I}_n$ and $\mathbf{0}_n$ are $n \times n$ identity and zero matrices. $\mathbf{B}_1 = -\eta_0 \text{diag}(-1/3600/C_{bat,1}, \ldots, -1/3600/C_{bat,n})$, $\boldsymbol{\alpha} = \text{diag}(\alpha_{1,1}, \ldots, \alpha_{1,n})$, and $\mathbf{B}_2 = \text{diag}((1-\alpha_{1,1})R_{1,1}, \ldots, (1-\alpha_{1,n})R_{1,n})$.

III. Problem Formulation of the Balancing Awareness Fast Charging Control

In this section, the balancing awareness fast charging control problem is formulated as a multiobjective optimization problem. It is favorable that a charging solution to the battery pack can make an optimal tradeoff among conflicting objectives of charging speed and balancing effects. Thus, the optimal objective for the balancing awareness fast charging control can be formulated by minimizing the following cost function:

$$J = J_t + J_e \tag{9}$$

where

1) *charging time* (J_t): J_t is the charging time from the initial SOC $\mathbf{x}_1(0)$ to the expected final SOC $\tilde{\mathbf{x}}_1$, which can be formulated as

$$J_t = N\Delta t \tag{10}$$

where N is the sample steps from $\mathbf{x}_1(0)$ to $\tilde{\mathbf{x}}_1$, and Δt is sampling time.

2) *balancing effects* (J_e): the battery inconsistency can be quantized by the Euclidean distance between the in-pack cell's SOC and the average SOC value ($\bar{\mathbf{x}}_1$) of the pack. Within this context, the cumulative inconsistency, i.e., balancing effects, during the charging period can be formulated as

$$J_e = \sum_{i=0}^{N} \|\mathbf{x_1}(i) - \overline{\mathbf{x}}_\mathbf{1}(i)\|^2 \tag{11}$$

where $\|\cdot\|$ denotes the 2-norm.

To avoid violations of safety constraints, the following operation constraints should be obeyed strictly.

1) *Maximum current limitations:* Due to the physical and chemical limitations of LIBs, a too-high current may lead to premature aging and even safety hazards. Thus, the battery current should be kept within the safety region

$$|\mathbf{1}_n u_1(k) + C\mathbf{u_2}(k)| \leq \mathbf{1}_n I_{\max} \tag{12}$$

where $I_{\max}$ is the maximum charging current.

2) *Voltage limitations:* To protect the battery from being overcharged, the battery voltage should be kept within a safety region, i.e.,

$$\mathbf{1}_n U_{\min} \leq \mathbf{y}(k) \leq \mathbf{1}_n U_{\max} \tag{13}$$

where $U_{\min}$ and $U_{\max}$ are the lower and upper cutoff voltages.

3) *SOC constraints:* The in-pack cells' SOC must also be kept within a safety region to avoid overcharging, i.e.,

$$\mathbf{1}_n 0 \leq \mathbf{x_1}(k) \leq \mathbf{1}_n 100\% \tag{14}$$

IV. Deep Reinforcement Learning Enabled Fast Charging Strategy

The balancing awareness fast charging problem proposed in this article is formulated as a constrained multiobjective optimization problem, i.e.,

$$\begin{aligned} &\arg\min_{u_1, \mathbf{u_2}} J \\ &\text{s.t} \quad \text{Battery dynamics: (7) and (8)} \\ &\quad \text{Safety constraints: (12)} - \text{(14)} \\ &\quad \text{Terminal conditions: } \mathbf{x}_1(N) = \tilde{\mathbf{x}} \end{aligned} \tag{15}$$

where the end time $N\Delta t$ is unknown, leading to challenges in solving (15). Moreover, the relationship between charging time and charging current cannot be analytically expressed, limiting the practicability of numerical optimization algorithms, such as gradient-based and Monte Carlo-based methods. Although some state-of-the-art techniques, such as MPC, can solve (15), it requires accurate identification of battery parameters. However, in practical application, it is impossible to identify the parameters of the battery every time, and fixed parameters will cause "model mismatch." With this context, a DRL-based fast charging control strategy is proposed to solve (15) due to its model-free property and good adaptability, which only needs data that can be directly obtained by BMS, such as voltage, temperature, SOC, and SOH. In this section, we first give out a brief introduction to the DRL framework. Then, the DQN algorithm and implementation details will be presented.

A. DRL Framework

To solve the fast charging problem (15) using DRL, it is required to describe the optimization problem as a Markov decision process (MDP). An MDP is defined as the five-tuple $(\mathcal{S}, \mathcal{A}, \mathcal{T}, \mathcal{R}, \gamma)$. $\mathbf{s}_t \in \mathcal{S}$ denotes the battery state space, $\mathbf{a}_t \in \mathcal{A}$ denotes the action space, $\mathbf{s}_t$ and $\mathbf{a}_t$ are battery state and selected actions at time $t \in \mathbb{R}^+$. $p(\mathbf{s}_{t+1}|\mathbf{s}_t, \mathbf{a}_t) \in \mathcal{T} : \mathcal{S} \times \mathcal{A} \to \mathcal{S}$ is the state transition probability density function of transitioning to state $\mathbf{s}_{t+1}$ conditioned on the agent taking action $\mathbf{a}_t$ in state $\mathbf{s}_t$. $r_{t+1} = r(\mathbf{s}_t, \mathbf{a}_t) \in \mathcal{R} : \mathcal{S} \times \mathcal{A} \to \mathbb{R}$ is the reward function that maps each transition $(\mathbf{s}_t, \mathbf{a}_t)$ to a scale. $\gamma \in (0, 1)$ is the discount rate. The basic framework of DRL for the MDP setting is illustrated in Fig. 5, which consists of two components, i.e., environment (Battery pack) and agent (Optimizer). At $\forall t$, the environment will give out the current state $\mathbf{s}_t$ through sensors or state observers. The reward $r_t = r(\mathbf{s}_{t-1}, \mathbf{a}_{t-1})$ will be also sent to the agent. Then, the agent will give out the actions $\mathbf{a}_t$ according to the currently learned policy π and $\mathbf{s}_t$. Next, the environment state will be transferred to $\mathbf{s}_{t+1}$ and feedback an updated reward r_{t+1}. In this sense, the DRL-based framework, can provide a closed-loop optimization solution, and the objective of the DRL algorithm is to find an optimal policy, $\pi^\star$ that maximum the long-term expected rewards

$$\pi^\star = \arg\max_{\pi} \mathbb{E}_\pi \left[\sum_{t=0}^{\infty} \gamma^t r_t \right]. \tag{16}$$

Authorized licensed use limited to: Nanjing University. Downloaded on December 03,2025 at 12:24:48 UTC from IEEE Xplore. Restrictions apply.

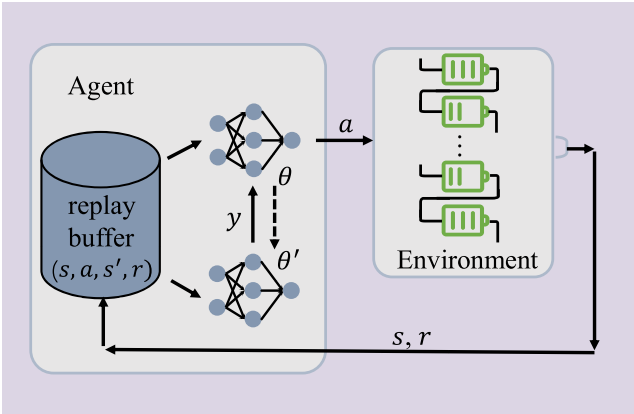

Fig. 5. Framework for DQN.

B. DQN-Based Fast Charging Algorithm

To solve (16), it is favorable to define a "state-action" value function, i.e., $Q^{\pi}(\mathbf{s}_t, \mathbf{a}_t)$, representing the expected total discounted reward when the action $\mathbf{a}_t$ is taken in state $\mathbf{s}_t$. Thus, the optimal Q-function can be expressed as

$$Q^{\star}(\mathbf{s}_t, \mathbf{a}_t) = \max_{\pi} \mathbb{E}_{\pi}\left[\sum_{k=0}^{\infty} \gamma^k r_{t+k} | \mathbf{s}_t = \mathbf{s}, \mathbf{a}_t = \mathbf{a}\right]. \quad (17)$$

The optimal Q-function obeys the well-known Bellman equation

$$Q^{\star}(\mathbf{s}, \mathbf{a}) = \mathbb{E}_{\mathbf{a}'}\left[r(\mathbf{s}, \mathbf{a}) + \gamma \max Q^{\star}(\mathbf{s}', \mathbf{a}' | \mathbf{s}, \mathbf{a})\right]. \quad (18)$$

If the optimal Q-function is known, then the optimal action $\mathbf{a}_t^{\star}$ can be extracted by choosing the action that maximizes $Q^{\star}(\mathbf{s}, \mathbf{a})$, without the knowledge of environment dynamics, i.e., the model-free properties. Thus, learning the Q-function becomes the key to DRL. One widely used tabular algorithm is Q-learning. However, the increasing dimensions of state space or action space will result in the "curse of dimensionality" of tabular Q-learning algorithm, such as the increase of cell numbers. One effective one to overcome this challenge is to use DQN [24], which approximates the Q-function by a deep neural network, i.e., $Q_{\phi}(\mathbf{s}_t, \mathbf{a}_t) \approx Q(\mathbf{s}_t, \mathbf{a}_t)$, where ϕ is called learning parameters, which is updated every learning iteration to minimize the mean-squared error in the Bellman equation in (18). Thus, a loss function can be defined as

$$\mathcal{L}_Q(\phi) = \mathbb{E}_{\mathbf{s},\mathbf{a},\mathbf{s}',\mathbf{a}'}\left[r + \gamma \max_{\mathbf{a}'} Q_{\phi}(\mathbf{s}', \mathbf{a}') - Q_{\phi}(\mathbf{s}, \mathbf{a})\right] \quad (19)$$

where the first two items denote the expected Q-value referring to (18), while the last item is the actual output of the current value network. During the learning process, we can apply a gradient-descent updating method on the loss function to improve the policy evaluation ability.

To update the DQN algorithm accurately and fast, the following two measures should be highlighted.

1) *Replay buffer:* To provide sufficient samples to update the deep Q-network, the experience tuples $(\mathbf{s}_t, \mathbf{a}_t, r_{t+1}, \mathbf{s}_{t+1})$ are stored in a replay buffer $\mathcal{D}$. During the training process, a minibatch $\mathcal{B}$ with length N_b is randomly selected. Sampling can destroy the correlation between adjacent samples and reduce the variance of the update. Moreover, tuples can be used several times under different weights, which can improve the efficiency of data use.
2) *Target network:* To overcome the stability issues caused by a single network, an additional target network is defined. The target network shares the same structure as the original Q-network, but its updating speed is slower. The parameter of the target network (ϕ^-) is updated once per N^- training steps, i.e., $\phi^- \leftarrow \phi$.

With the design of the replay buffer and target network, the DQN algorithm is summarized in Algorithm 1.

Algorithm 1: DQN Algorithm.

Initialize replay buffer $\mathcal{D}$ and maximum size N_r
Initialize Q-function with random parameter ϕ.
Initialize target action value network with $\phi^- \leftarrow \phi$.
for all episode $e \in \{1, 2, \ldots, M\}$ **do**
  Obtain initial states $\mathbf{s}_1 = \{\mathbf{x}(1)\}$ of the environment.
  for all $t \in \{1, 2, \cdots\}$ **do**
    Following ϵ-greedy policy, select $\mathbf{a}_t$ by

$$\mathbf{a}_t = \begin{cases} \text{a random action}, & \text{with probability } \epsilon \\ \arg\max_{\mathbf{a}} Q_{\phi}(\mathbf{s}_t, \mathbf{a}) & \text{Otherwise.} \end{cases}$$

    Execute the $\mathbf{a}_t$ to the environment and obsever reward r_t and updated state $\mathbf{x}(t+1)$.
    Store tuple $(\mathbf{s}_t, \mathbf{a}_t, r_t, \mathbf{s}_{t+1})$ into $\mathcal{D}$.
    Sampling a minibatch of N_b tuples $(\mathbf{s}_{j-1}, \mathbf{a}_{j-1}, r_j, s_j)$ from $\mathcal{D}$.
    Set

$$y_j = \begin{cases} r_j, & j+1 \text{ terminates} \\ r_j + \gamma \max_{\mathbf{a}'} Q_{\phi^-}(\mathbf{s}_{j+1}, \mathbf{a}') & \text{Otherwise.} \end{cases}$$

    Perform a gradient decent step on $(y_j - Q_{\phi}(\mathbf{s}_j, \mathbf{a}_j))^2$ w.r.t. the network parameter ϕ, i.e.,

$$\phi \leftarrow \phi - \sigma_Q \bigtriangledown_{\phi} \mathcal{L}_Q(\phi)$$

    In every N^- steps, reset the target network by Q-network, i.e, $\phi^- \leftarrow \phi$.
  end for
end for

C. Implementation of the Fast Charging Algorithm

To solve the proposed balancing awareness fast charging optimization problem in (15) using DQN, the five-tuple of the MDP can be defined as follows.

1) *States:* As can be seen in (15), the objective of the balancing awareness fast charging control is to charge in-pack cells' SOC to a predefined threshold with high consistencies. Thus, the state during charging control can

Authorized licensed use limited to: Nanjing University. Downloaded on December 03,2025 at 12:24:48 UTC from IEEE Xplore. Restrictions apply.

TABLE II
DQN HYPERPARAMETERS

Symbol	Description	Value
η_Q	Learning rate of Q network	0.01
γ	Decay factor	0.9
N_r	Maximum size of replay buffer	20000
N^-	Target network update frequency	100
N_b	Batch size	512

be defined as the SOC vector ($\mathbf{x}_1$), terminal voltage vector ($\mathbf{y}$) of the battery pack, and the ambient temperature.

2) *Actions:* During charging control process, the inputs are bus current and equalization operations, i.e., u_1 and $\mathbf{u}_2$.
3) *Rewards:* The rewards can be defined according to the objective function and safety constraints

$$r_t = r_{\text{time}} + r_{\text{bal}} + r_{\text{vol}} + r_{saoc} \tag{20}$$

where $r_{\text{time}} \triangleq -1$ denotes charging time waste. $r_{\text{bal}} = -\|\mathbf{x_1}(i) - \overline{\mathbf{x}}_\mathbf{1}(i)\|^2/\sqrt{n}$ denotes the inconsistency effects, and

$$r_{vol} = \sum_{j=1}^{n} \delta_{v,j}, \tag{21}$$

$$r_{soc} = \sum_{j=1}^{n} \delta_{s,j} \tag{22}$$

where $\delta_{v,j}$ and $\delta_{s,j}$ denote the overvoltage and overcharge penlties of jth cell, which can be defined as

$$\delta_{v,j} = \begin{cases} -100(y_i - U_{\max}), & \text{if } y_i \geq U_{\max} \\ 0, & \text{else} \end{cases} \tag{23}$$

$$\delta_{s,j} = \begin{cases} -100, & \text{if } SOC_i \geq 100\% \\ 0, & \text{else} \end{cases}. \tag{24}$$

V. RESULTS AND DISCUSSIONS

To validate the proposed DQN-based battery balancing awareness fast charging control algorithm, the Q network has the structure of $n_{\text{state}} \times 128 \times 256 \times 256 \times n_{\text{action}}$. Since the state vector is SOC and the terminal voltage of four batteries and the ambient temperature, $n_{\text{state}} = 9$. The action is the switch of four batteries and the charge rate is discretized from 0 to 3 C following a step of 0.5 C, i.e., $n_{\text{action}} = 4 \times 7 = 28$. The target network and the Q network have the same initial parameters. Other hyperparameters are shown in Table.II. Adam optimizer is used to accelerate the training process. The threshold for the equalization standard deviation is set as 1.5%. It is worth noting than the decision cycle of the proposed algorithm is set as one minute, which means the agent decides charge current and balancing operations every minute, and the actions are kept the same during each decision cycle. This operation can avoid the frequency operation of battery equalizers and reduce the training time of the DQN algorithm.

TABLE III
CASES FOR DIFFERENT CELLS' INITIAL AND TERMINAL SOC VECTORS

Initial SOC (%)	Method	Terminal SOC (%)
Case1 $[80, 61, 50, 65]^T$	1	$[98.51, 98.51, 95.19, 96.95]^T$
	2	$[93.98, 91.20, 90.55, 92.29]^T$
	3	$[99.93, 84.58, 69.70, 84.97]^T$
	4	$[100.00, 84.66, 69.76, 85.03]^T$
Case2 $[30, 20, 30, 25]^T$	1	$[95.99, 96.03, 96.91, 98.98]^T$
	2	$[96.04, 96.10, 96.97, 99.25]^T$
	3	$[97.60, 99.97, 96.80, 92.71]^T$
	4	$[97.61, 99.99, 96.81, 92.72]^T$
Case3 $[68, 64, 65, 70]^T$	1	$[96.36, 99.21, 96.11, 96.36]^T$
	2	$[94.52, 95.37, 92.91, 96.48]^T$
Case4 $[85, 62, 71, 74]^T$	1	$[97.90, 97.65, 99.16, 95.56]^T$
	2	$[88.13, 86.09, 88.82, 85.77]^T$
Case1 (T=15°C) $[80, 61, 50, 65]^T$	1	$[97.46, 97.38, 95.54, 97.67]^T$
	2	$[89.06, 88.42, 86.17, 89.58]^T$
Case1 (T=45°C) $[80, 61, 50, 65]^T$	1	$[96.19, 97.55, 95.65, 99.01]^T$
	2	$[92.07, 93.21, 91.11, 94.59]^T$

A. Training and Validation in Simulations

To train and validate the DQN algorithm, four simulation cases are first designed. The initial SOCs are listed in Table III. Since temperature has a certain impact on the battery parameters, Case 1 and 2 in three different temperature are employed to train the DQN algorithm firstly, the performance of the trained agents in 25 °C are shown in Fig. 6. For Case 1, the "cask effect" can be observed when training the algorithm without an equalization consideration. As shown in Fig. 6(c) and (d), the charging processes of the DQN algorithm and CC&CV algorithm without equalization are terminated at 348 and 349 s, respectively, because one of the in-pack cells' SOC reaches the cutoff threshold. It can be seen that the capacity of the battery pack is not fully utilized. On the contrary, in Fig. 6(a) and (b), the balancing control can overcome the "cask effect" and fully utilize battery capacity.

However, the results in Fig. 6(b) show that CC&CV with equalization has the following limitations. The CC and CV mode is switched when the highest voltage reaches the cut-off thresholds (470 s when cell B1's terminal voltage reaches 3.65 V). Thus, the balancing control is mostly performed in the CV period. The charging control and balancing control are performed separately, which may lead to the following two potential results: 1) low average SOC might be observed at the end of charging due to the insufficient charged electric charge caused by the low charge current in CV mode and 2) long balancing time would be observed, since the CC charging period might increase the inconsistency of the battery pack. Comparing the results in Fig. 6(a) and (b), it can be seen that the proposed DQN algorithm which regards balancing and fast-charging control problem as a whole can overcome the above drawbacks. The final average SOC of the CC&CV with equalization is 92.01%, while it is 97.21% for the proposed algorithm, improving 5% charged capacity. The total charging time of CC&CV with equalization is 1962 s, while it is 1928 s for the proposed algorithm, saving 34 s charging time. With this context, the proposed algorithm can

Authorized licensed use limited to: Nanjing University. Downloaded on December 03,2025 at 12:24:48 UTC from IEEE Xplore. Restrictions apply.

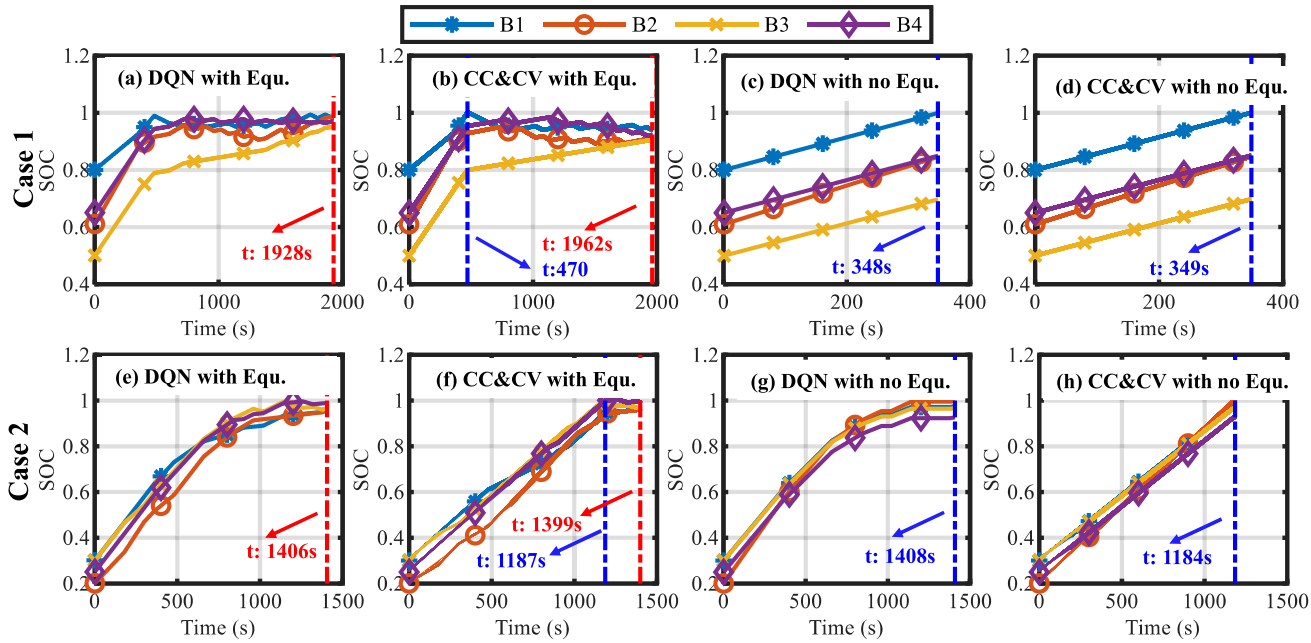

Fig. 6. Cells' SOC response for the battery pack with the initial SOCs in (a)–(d) Case 1and (e)–(h) Case 2. (a) and (e) Diagrams of DQN with equalizers. (b) and (f) Diagrams of CC&CV with equalizers. (c) and (g) Diagrams of DQN with no equalizers. (d) and (h) Diagrams of CC&CV with no equalizers.

charge more electric energy at a faster speed. To further refine the trained agent under Case 1, Case 2 with a low initial SOC and smaller inconsistency is utilized. As shown in Fig. 6(e)–(h), the proposed DQN algorithm can provide equivalent performance in final mean SOC, final SOC inconsistency, and charging time. The reason is that the equalization time is sufficient for this case. In Fig. 6(c) and (d), it can be seen that the charging time of CC&CV is shorter than DQN. The reason is that the over-voltage and over-charge penalties in (23) and (24) are considered in the proposed algorithm, thus, the charging current becomes smaller at high voltage and SOC regions for the safety concerns. However, this is not fully considered in the CC&CV algorithm, since it switches charge mode according to the highest voltage, and safety thresholds might be violated. Therefore, the effectiveness and superiority of the proposed algorithm during the training process are validated in the performance metrics in terms of charging time, balancing control, and safety concerns.

To further validate the generalization ability of the trained agent under Case 1, additional Cases 3 and 4 are designed. The initial SOCs and final results are illustrated in Table III and Fig. 7(c). It can be seen that the proposed DQN can provide faster and better balancing awareness charging control, compared to the rule-based CC&CV method.

Then, to study the effect of temperature change on the results, the performance of the trained agents in 15 °C and 45 °C are shown in Fig. 7(d). It can be seen that compared with CC&CV, the proposed DQN has a higher average SOC when the time consumption is almost the same. And since the internal resistance of the battery is smaller due to the higher temperature, it is harder for the batteries to reach the cutoff voltage, so the total time taken is also shorter.

TABLE IV
COMPARISON BETWEEN SIMULATION SOCS AND EXPERIMENTAL SOCS

T(°C)	No.	DQN with equalizers		CC&CV with equalizers	
		Simulation	Experimental	Simulation	Experimental
25	1	98.51%	100.78%	93.98%	91.99%
	2	98.51%	98.98%	91.20%	90.62%
	3	95.19%	95.99%	90.55%	91.26%
	4	96.95%	97.77%	92.29%	92.12%
45	1	96.19%	97.47%	92.07%	92.31%
	2	97.55%	98.58%	93.21%	92.48%
	3	95.65%	95.70%	91.11%	91.44%
	4	99.01%	98.32%	94.59%	93.87%

B. Experimental Validation of the Proposed Algorithm

To further verify the effectiveness, superiority, and reliability of the proposed algorithm, experimental tests in 25 °C and 45 °C are performed with the same initial SOC set as Case 1. First, the four in-pack cells are fully charged, and the pulse current discharging processes are performed to reach the target SOCs for different cells. The trained algorithm is then applied to the host computer to control battery charging processes. The algorithm makes a decision every minute based on the current-voltage and SOC calculated by the Ah-counting method until the threshold is reached. Then, the battery test system calculates the balancing current and the bus current and controls the charging process of the four batteries separately. The numeric results are listed in Table IV, where the Ah-counting method is employed to calculate the real SOC of batteries.

The bus current of the proposed algorithm and CC&CV in 25 °C are plotted in Fig. 8(a) and (b), respectively. It can be seen that the proposed algorithm can provide a "CC&CV"-like

Authorized licensed use limited to: Nanjing University. Downloaded on December 03,2025 at 12:24:48 UTC from IEEE Xplore. Restrictions apply.

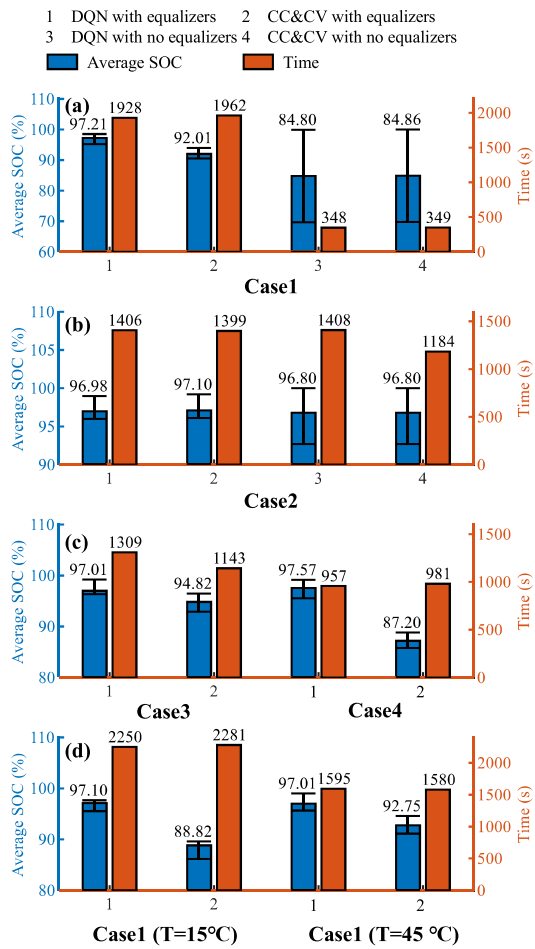

Fig. 7. Battery pack' s average SOC and total time with the initial SOCs as in (a) Case 1. (b) Case 2. (c) Case 3 and 4. (d) Case 1 in 15 °C and 45 °C.

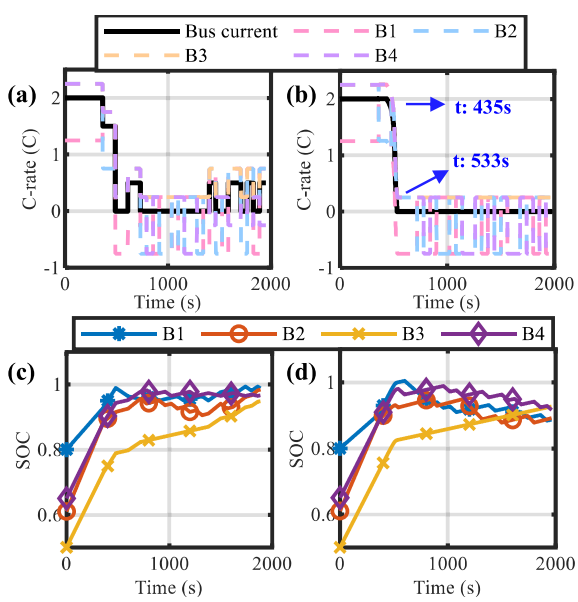

Fig. 8. Bus current and the total current for each cell (25 °C) of (a) DQN with equalizers and (b) CC&CV with equalizers and cells' SOC response of (c) DQN with equalizers, and (d) CC&CV with equalizers in the experiment.

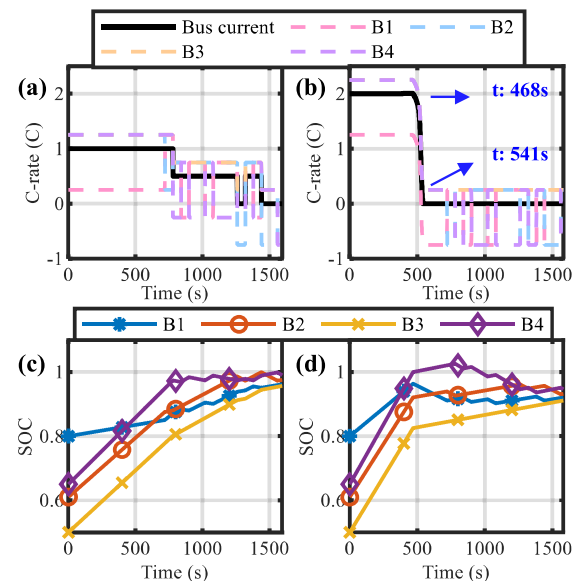

Fig. 9. Bus current (45 °C) of (a) DQN with equalizers and (b) CC&CV with equalizers, and cells' SOC response of (c) DQN with equalizers and (d) CC&CV with equalizers in the experiment.

charge profile. However, the proposed algorithm can provide an additional supplement when in-pack cells' states are away from safety constraints, which, thus, can provide a higher mean SOC value at the end of equalization. The in-pack cells' SOCs are illustrated in Fig. 8(c) and (d). The results in 45 °C are plotted in Fig. 9. Comparing the bus current in different temperatures, it can be seen that there is not an optimal bus current under Case1, because it is the equalization process that affects the total time. And since the cells have less internal resistances and larger capacities at 45 °C, it is harder to reach the upper limit of the voltage cutoff, so the CC process in Fig. 9(b) takes longer, while the CV process takes less time. The experimental results show a high agreement with the simulation result in Fig. 7, validating the effectiveness of the proposed algorithm.

VI. Conclusion

Battery fast charging and balancing control are of great importance in the application of EVs. This article, thus, proposed a balancing awareness fast charging control method using deep reinforcement learning. To perform equalization control, a time-sharing bidirectional flyback transformer-based cell-to-pack equalization topology was first proposed. Then, the balancing awareness fast charging was formulated as a constrained multiobjective optimization problem by considering charging time, balancing time, and safety concerns in terms of overvoltage and overcharging. Next, a deep Q-learning algorithm was established to train a battery fast charging agent that optimizes both the equalization current and bus current. Finally, both simulations and experimental tests were designed to train the algorithm and validate the effectiveness, superiority, and reliability of the proposed algorithm. Both simulation and experimental results indicate that the proposed algorithm can provide a better charging performance than the CC&CV protocol.

Authorized licensed use limited to: Nanjing University. Downloaded on December 03,2025 at 12:24:48 UTC from IEEE Xplore. Restrictions apply.

The limitations of the proposed method lie in three aspects, i.e., safety and robustness guarantee during the training process, lifelong training mechanisms against battery degradation effects, and scalability to a large-scale battery pack, which can be regarded as the prospective and future research directions.

References

[1] B. G. Carkhuff, P. A. Demirev, and R. Srinivasan, "Impedance-based battery management system for safety monitoring of lithium-ion batteries," *IEEE Trans. Ind. Electron.*, vol. 65, no. 8, pp. 6497–6504, Aug. 2018.

[2] Y. Zhang, Z. Zhou, Y. Kang, C. Zhang, and B. Duan, "A quick screening approach based on fuzzy C-means algorithm for the second usage of retired lithium-ion batteries," *IEEE Trans. Transport. Electrific.*, vol. 7, no. 2, pp. 474–484, Jun. 2021.

[3] Z. Wei, Z. Quan, J. Wu, Y. Li, J. Pou, and H. Zhong, "Deep deterministic policy gradient-DRL enabled multiphysics-constrained fast charging of lithium-ion battery," *IEEE Trans. Ind. Electron.*, vol. 69, no. 3, pp. 2588–2598, Mar. 2022.

[4] S. Park et al., "A deep reinforcement learning framework for fast charging of li-ion batteries," *IEEE Trans. Transport. Electrific.*, vol. 8, no. 2, pp. 2770–2784, Jun. 2022.

[5] G. Dong, F. Yang, K. L. Tsui, and C. Zou, "Active balancing of lithium-ion batteries using graph theory and A-star search algorithm," *IEEE Trans. Ind. Informat.*, vol. 17, no. 4, pp. 2587–2599, Apr. 2021.

[6] G. Dong, W. Han, and Y. Wang, "Dynamic Bayesian network-based lithium-ion battery health prognosis for electric vehicles," *IEEE Trans. Ind. Electron.*, vol. 68, no. 11, pp. 10949–10958, 2021.

[7] J. Yang, Y. Cai, and C. C. Mi, "State-of-health estimation for lithium-ion batteries based on decoupled dynamic characteristic of constant-voltage charging current," *IEEE Trans. Transport. Electrific.*, vol. 8, no. 2, pp. 2070–2079, Jun. 2022.

[8] X. Hu, Y. Che, X. Lin, and Z. Deng, "Health prognosis for electric vehicle battery packs: A data-driven approach," *IEEE/ASME Trans. Mechatron.*, vol. 25, no. 6, pp. 2622–2632, Dec. 2020.

[9] C. Zou, X. Hu, Z. Wei, T. Wik, and B. Egardt, "Electrochemical estimation and control for lithium-ion battery health-aware fast charging," *IEEE Trans. Ind. Electron.*, vol. 65, no. 8, pp. 6635–6645, Aug. 2018.

[10] Y. Li et al., "Electrochemical model-based fast charging: Physical constraint-triggered PI control," *IEEE Trans. Energy Conver.*, vol. 36, no. 4, pp. 3208–3220, Dec. 2021.

[11] H. Perez, S. Dey, X. Hu, and S. Moura, "Optimal charging of li-ion batteries via a single particle model with electrolyte and thermal dynamics," *J. Electrochem. Soc.*, vol. 164, pp. A1679–A1687, 2017.

[12] H. E. Perez, X. Hu, S. Dey, and S. J. Moura, "Optimal charging of li-ion batteries with coupled electro-thermal-aging dynamics," *IEEE Trans. Veh. Technol.*, vol. 66, no. 9, pp. 7761–7770, Sep. 2017.

[13] Y. Wang, C. Zhou, and Z. Chen, "Optimization of battery charging strategy based on nonlinear model predictive control," *Energy*, vol. 241, 2022, Art. no. 122877.

[14] X. Hu, Y. Zheng, X. Lin, and Y. Xie, "Optimal multistage charging of NCA/Graphite lithium-ion batteries based on electrothermal-aging dynamics," *IEEE Trans. Transport. Electrific.*, vol. 6, no. 2, pp. 427–438, Jun. 2020.

[15] Q. Ouyang et al., "Module-based active equalization for battery packs: A two-layer model predictive control strategy," *IEEE Trans. Transport. Electrific.*, vol. 8, no. 1, pp. 149–159, Mar. 2022.

[16] Y. Wang, C. Zhang, Z. Chen, J. Xie, and X. Zhang, "A novel active equalization method for lithium-ion batteries in electric vehicles," *Appl. Energy*, vol. 145, pp. 36–42, 2015.

[17] X. Zheng, X. Liu, Y. He, and G. Zeng, "Active vehicle battery equalization scheme in the condition of constant-voltage/current charging and discharging," *IEEE Trans. Veh. Technol.*, vol. 66, no. 5, pp. 3714–3723, May 2017.

[18] Q. Ouyang, J. Chen, J. Zheng, and H. Fang, "Optimal multiobjective charging for lithium-ion battery packs: A hierarchical control approach," *IEEE Trans. Ind. Inf.*, vol. 14, no. 9, pp. 4243–4253, Sep. 2018.

[19] Q. Ouyang, Z. Wang, K. Liu, G. Xu, and Y. Li, "Optimal charging control for lithium-ion battery packs: A distributed average tracking approach," *IEEE Trans. Ind. Inf.*, vol. 16, no. 5, pp. 3430–3438, May 2020.

[20] A. Tomaszewska et al., "Lithium-ion battery fast charging: A review," *eTransportation*, vol. 1, 2019, Art. no. 100011.

[21] A. Meintz et al., "Enabling fast charging - vehicle considerations," *J. Power Sources*, vol. 367, pp. 216–227, 2017.

[22] F. Naseri, E. Schaltz, D. I. Stroe, A. Gismero, and E. Farjah, "An enhanced equivalent circuit model with real-time parameter identification for battery state-of-charge estimation," *IEEE Trans. Ind. Electron.*, vol. 69, no. 4, pp. 3743–3751, Apr. 2022.

[23] F. Zheng, Y. Xing, J. Jiang, B. Sun, J. Kim, and M. Pecht, "Influence of different open circuit voltage tests on state of charge online estimation for lithium-ion batteries," *Appl. Energy*, vol. 183, pp. 513–525, 2016.

[24] K. Arulkumaran, M. P. Deisenroth, M. Brundage, and A. A. Bharath, "Deep reinforcement learning: A brief survey," *IEEE Signal Process. Mag.*, vol. 34, no. 6, pp. 26–38, Nov. 2017.

Yikun Yang received the B.E. degree in automation, in 2021, from Nanjing University, Nanjing, China, where he is currently working toward the M.E. degree in electronic information with the Department of Control and System Engineering.

His current research interests include battery management and reinforcement learning.

Jiarui He received the B.E. degree in automation, in 2022, from Nanjing University, Nanjing, China, where he is currently working toward the M.E. degree in electronic information with the Department of Control and System Engineering.

His current research interests include the fast-charging control of lithium-ion battery and reinforcement learning.

Chunlin Chen (Senior Member, IEEE) received the B.E. degree in automatic control and the Ph.D. degree in control science and engineering from the University of Science and Technology of China, Hefei, China, in 2001 and 2006, respectively.

He is currently a Professor and the Chair of the Department of Control and Systems Engineering, School of Management and Engineering, Nanjing University, Nanjing, China. From 2012 to 2013, he was a Visiting Scholar with Princeton University, Princeton, NJ, USA. He had visiting positions with the University of New South Wales, Canberra, Australia, and the City University of Hong Kong, Hong Kong, China. His recent research interests include machine learning, pattern recognition, intelligent information processing, and quantum control.

Dr. Chen is the Chair of Technical Committee on Quantum Cybernetics, IEEE Systems, Man and Cybernetics Society. He is a Committee Member of JiangSu association of Artificial Intelligence (JSAI) Pattern Recognition Committee, and a Committee Member of China Association of Artificial Intelligence (CAAI) Machine Learning Committee.

Jingwen Wei (Member, IEEE) received the Ph.D. degree in control science and engineering with the University of Science and Technology of China, Hefei, China, in 2018.

She is currently an Assistant Professor with the Department of Control and Systems Engineering, Nanjing University, Nanjing, China. Her research interests include state estimation, balancing and health management, fault diagnosis, and fast charging control of lithium-ion batteries in electrical vehicles and energy storage.

Authorized licensed use limited to: Nanjing University. Downloaded on December 03,2025 at 12:24:48 UTC from IEEE Xplore. Restrictions apply.